PROJECT DETAIL

This section includes a detailed project description for each project included in the City's five year Capital Improvements Plan. Each project description contains a brief description of the project, the funding sources, the total proposed funding, and the impact, if any, on the City's operating budget. The projects have been divided into three major categories. These include road and bridge improvements, neighborhood stabilization projects, and facility improvement and equipment replacement.

This page intentionally left blank.

ROAD AND BRIDGE

IMPROVEMENT PROJECTS

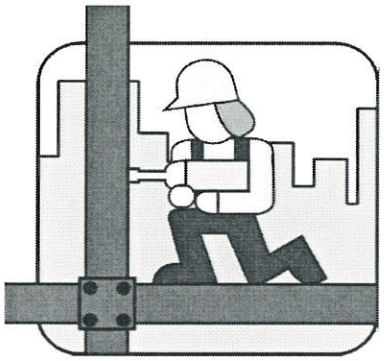

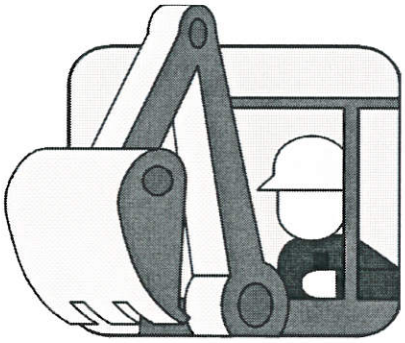

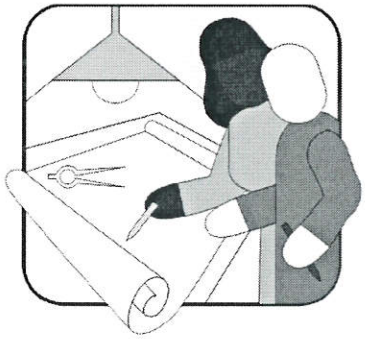

This page intentionally left blank.

Capital Improvements Project Detail

Category: **ROAD AND BRIDGE PROJECTS**

Project : Bridge Resurfacing/Repair

Project Description: Many of the City's bridges need to be resurfaced and repaired and do not qualify for Federal matching funds. Funds will be allocated for bridge work, using 100 percent City funds. The Five-Year Capital Plan will continue to provide funding for these projects.

In FY09 the Facility & Infrastructure Debt Service, funded by the Capital Budget provided funding for Bridge Repair and Bridge Maintenance Program (TIP). Future bridge repair projects and unknown match funds have been planned for in this section.

Source Of Funds: Capital Improvement Sales Tax - Citywide Portion

G.O. Bond Issue

Impact on Operating Budget Bridge resurfacing and repair will reduce spending on bridge and pavement surface maintenance and spot repairs over the next several years. The Board of Public Service will experience some design & management costs associated with this project.

	Capital Budget	Proposed Capital Funding				
Project Costs	**FY2017**	**FY2018**	**FY2019**	**FY2020**	**FY2021**	**Total**
Improvement Project	**$0**	$750,000	$750,000	$750,000	$750,000	$3,000,000

Capital Improvements Project Detail

Category: **ROAD AND BRIDGE PROJECTS**

Project : Columbia Ave. Bridge @ Southwest

Project Description: The Columbia Avenue Bridge at Southwest Avenue was constructed in 1913. The bridge has a low sufficiency rating and needs to be replaced. The new bridge over the Missouri Pacific Railroad tracks will have four lanes of traffic and sidewalks on both sides. The federal TEA-21 program will provide 80 percent of the funding for this project. The City intends to replace this bridge together with the Southwest Ave. bridge, combining them together with a roadway shift to the south to form one bridge.

This projects schedule for completion is under review.

Source Of Funds: Federal Funds (TEA-21 Grant)

Citywide Capital Improvement Fund

Impact on Operating Budget Bridge replacement will reduce spending on bridge and pavement surface maintenance over the next several years. The Board of Public Service will experience some design & management costs associated with this project.

	Capital Budget	Proposed Capital Funding				
Project Costs	**FY2017**	**FY2018**	**FY2019**	**FY2020**	**FY2021**	**Total**
Improvement Project	**$0**	$800,000	$800,000	$400,000	$0	$2,000,000

Capital Improvements Project Detail

Category: **ROAD AND BRIDGE PROJECTS**

Project : Compton Bridge @ Chouteau

Project Description: The Compton Bridge north of Chouteau Avenue was constructed in 1965. The bridge has a low sufficiency rating and the superstructure needs to be replaced. The rehabitated bridge will have four traffic lanes and sidewalks on both sides. The federal TEA-21 program will provide 80 percent of the funding for this project.

In FY09 the Facility & Infrastructure Debt Service, funded by the Capital Budget provided funding for Bridge Match Repair Program. Many repairs to the sub-structure have been preformed and only the superstructure needs to be replaced.

Programming for this project is not completed. The City will apply for Federal Funds in future years.

Source Of Funds: Federal Funds (TEA-21 Grant)

Citywide Capital Improvement Fund

Impact on Operating Budget Bridge replacement will reduce spending on bridge and pavement surface maintenance over the next several years. The Board of Public Service will experience some design & management costs associated with this project.

	Capital Budget	Proposed Capital Funding				
Project Costs	**FY2017**	**FY2018**	**FY2019**	**FY2020**	**FY2021**	**Total**
Improvement Project	**$0**	$1,000,000	$1,000,000	$0	$0	$2,000,000

Capital Improvements Project Detail

Category: **ROAD AND BRIDGE PROJECTS**

Project : Forest Park Parkway Bridge @ Forest Park

Project Description: The Forest Park Parkway Bridge was constructed in 1959 and is located west of Kingshighway in Forest Park. The bridge has a low sufficiency rating and needs to be replaced. The new bridge constructed over the Metrolink light rail tracks will have four driving lanes. The federal TEA-21 Grant program will provide 80 percent of the funding for this project.

Programming for this project is not completed.

Source Of Funds: Federal Funds (TEA-21 Grant)

Citywide Capital Improvement Fund

Impact on Operating Budget Bridge replacement will reduce spending on bridge and pavement surface maintenance over the next several years. The Board of Public Service will experience some design & management costs associated with this project.

	Capital Budget	Proposed Capital Funding				
Project Costs	**FY2017**	**FY2018**	**FY2019**	**FY2020**	**FY2021**	**Total**
Improvement Project	**$0**	$200,000	$100,000	$100,000	$0	$400,000

Capital Improvements Project Detail

Category: **ROAD AND BRIDGE PROJECTS**

Project : Market Street Traffic Signal Interconnect (CMAQ)

Project Description: This project consists of upgrading the Traffic Signals and signal control system between Tucker Blvd. and Compton Ave. The interconnection of the signals not only will improve traffic flow but will have a positive impact on air pollution. This project is 80% Federally funded.

In FY17 funds from the Capital Budget will be used as a Match.

Bids for the project have been received.

Source Of Funds: Federal funds (TEA-21 Reimbursable Program)
Citywide Capital Improvement Fund
G.O. Bond Issue

Impact on Operating Budget The modernization and installation of new signal systems will upgrade the present system, which will reduce the maintenance and repair costs over the next several years. The new signals are more energy efficient and will reduce the utility costs. The Board of Public Service and the Street Department will experience some design & management costs associated with this project.

	Capital Budget	Proposed Capital Funding				
Project Costs	**FY2017**	**FY2018**	**FY2019**	**FY2020**	**FY2021**	**Total**
Improvement Project	**$250,000**	$250,000	$0	$0	$0	$500,000

Capital Improvements Project Detail

Category: **ROAD AND BRIDGE PROJECTS**

Project : Traffic Signal Detection

Project Description: This project will allow modifications to traffic controls that will allow operators of fire trucks and ambulances to remotely control traffic signals from their vehicles to allow for quicker and safer movements of emergency vehicles. This project is 80% federally funded.

Design for this project was completed and construction planning is under review.

Source Of Funds: Federal funds (TEA-21 Reimbursable Program)

Citywide Capital Improvement Fund

Impact on Operating Budget The modernization and installation of new signal systems will upgrade the present system, which will reduce the maintenance and repair costs over the next several years. The new signals are more energy efficient and will reduce the utility costs. The Board of Public Service and the Street Department will experience some design & management costs associated with this project. The major outcomes will be the improved response time and reduction of accidents.

	Capital Budget	Proposed Capital Funding				
Project Costs	**FY2017**	**FY2018**	**FY2019**	**FY2020**	**FY2021**	**Total**
Improvement Project	**$0**	$300,000	$300,000	$0	$0	$600,000

Capital Improvements Project Detail

Category: **ROAD AND BRIDGE PROJECTS**

Project : Arterial Streets

Project Description: Many of the City's arterial streets will be resurfaced. Arterial streets are those heavily traveled streets in industrial and commercial areas, streets used as public transportation routes, and streets servicing large areas of employment. Damaged and deteriorated roadway pavement will be replaced or repaired prior to resurfacing. In compliance with the Americans with Disabilities Act, curb cuts will be installed when arterial streets are repaired. The Director of Streets, using a rating system, will determine the quantity and order of streets to be resurfaced.

Source Of Funds: Capital Improvement Sales Tax - Citywide Portion

Impact on Operating Budget Arterial street resurfacing will reduce spending on pavement surface maintenance over the next several years.

	Capital Budget	Proposed Capital Funding				
Project Costs	**FY2017**	**FY2018**	**FY2019**	**FY2020**	**FY2021**	**Total**
Improvement Project	**$0**	$1,000,000	$1,000,000	$1,000,000	$1,000,000	$4,000,000

This page intentionally left blank.

NEIGHBORHOOD

STABILIZATION PROJECTS

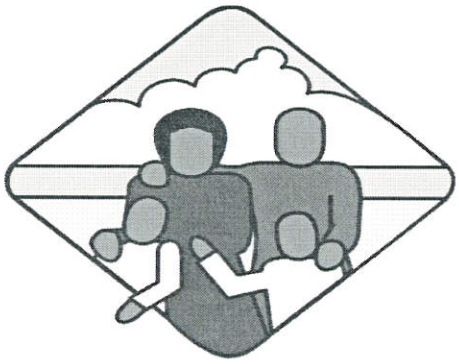

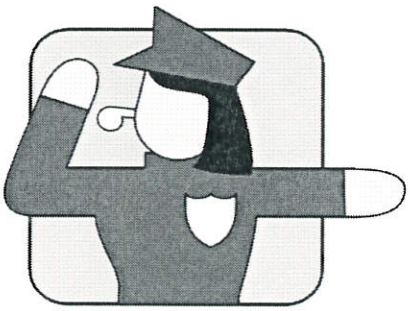

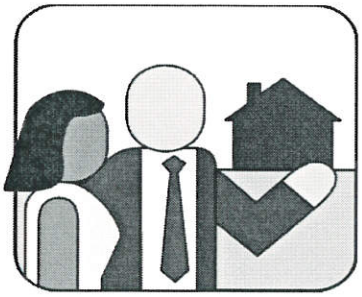

This page intentionally left blank.

Capital Improvements Project Detail

Category: **NEIGHBORHOOD STABILIZATION PROJECTS**

Project : WARD IMPROVEMENTS

Project Description: A listing of the typical projects are shown below. In FY17 due to revenue constraints, a part of the 1/2 Cent Capital funds have been reallocated to fund existing debt. However, a positive beginning balance, from the prior year, will supplement the 1/2 Cent funds. Each Alderman will receive approximately $300,000, $18,000 from a beginning balance and $282,000 from the 1/2 Cent revenues for their Ward projects. Examples as to type of projects are shown below. Projects selected by the Aldermen are detailed in the FY2017 Capital Budget section near the end of this book after they have be selected by the Aldermen.

Residential Street & Alley Resurfacing
Neighborhood Park Improvements
50/50 Sidewalk Program
Alley Reconstruction/Improvements
Pedestrian Lighting Improvements
Decorative Signage/ Fountain/ Monument/ Planter/ Trash Receptacles
Park, Median or Garden Area Improvements
Refuse Container Replacement
Sidewalk / Curb / Street / Alley Improvements
Street Lighting Enhancement
Street Reconstruction or Repair
Street Tree Program & Tree Survey
Streetscape Projects
Video Surveillance Cameras

Source Of Funds: Capital Improvement Sales Tax - Ward Account

Beginning Balance

Impact on Operating Budget The Street Division and Board of Public Service (BPS) provide the labor, engineering, design and project management services for both the City's public work projects and for the Ward Capital projects. Many of these projects are small in size but collectively they involve a major portion of the departments operational costs. To offset these costs the Capital Budget reimburses the departments for a portion of their labor costs.

	Capital Budget	Proposed Capital Funding				
Project Costs	**FY2017**	**FY2018**	**FY2019**	**FY2020**	**FY2021**	**Total**
Improvement Projects	**$7,888,000**	$8,500,000	$8,500,000	$8,500,000	$8,500,000	$41,888,000
Beginning Balance	**$517,000**	$0	$0	$0	$0	$517,000

Capital Improvements Project Detail

Category: **NEIGHBORHOOD STABILIZATION PROJECTS**

Project : Ash Tree Removals Due to Insect Damage

Project Description: With the Nationwide blight caused by Emerald Ash Borer reaching the St. Louis area, funding was needed to address the death of trees due to this insect. Other funding sources will be used for treatment and later replacement of different types of trees. The Capital funds will be used to reduce the public safety hazard caused when these tree die.

The FY17 Capital Budget will begin the process of tree removal.

Source Of Funds: Capital Improvement Sales Tax - Major Park Account

Impact on Operating Budget Capital funding will reduce the impact on the operating departments involved in tree removal.

	Capital Budget	Proposed Capital Funding				
Project Costs	**FY2017**	**FY2018**	**FY2019**	**FY2020**	**FY2021**	**Total**
Improvement Projects	**$529,000**	$600,000	$600,000	$600,000	$600,000	$2,929,000

Capital Improvements Project Detail

Category: **NEIGHBORHOOD STABILIZATION PROJECTS**

Project : 2014 Park Improvement Bonds

Project Description: In FY16 the funding from the 1/2 Cent Capital Improvement Sales Tax for Major Parks and the Metro Parks Sales Tax for Major Parks has been combined to support the new 2014 Park Improvement Bonds. The Bonds will provide $26,000,000 in funding for major projects in both the Major and Neighborhood Parks. A detailed listing of projects can be found in the FY15 Capital Budget Book on the City's Web Site.

Source Of Funds: Capital Improvement Sales Tax - Major Park Account

Metro Parks Sales Tax - Major Park Accounts

3/16 Cent Metro Parks Sales Tax - Major Park Accounts

3/16 Cent Metro Parks Sales Tax - Neighborhood Park Accounts

Impact on Operating Budget

	Capital Budget	Proposed Capital Funding				
Project Costs	**FY2017**	**FY2018**	**FY2019**	**FY2020**	**FY2021**	**Total**
3/16 Cent Metro Parks	**$1,200,000**	$1,200,000	$1,200,000	$1,200,000	$1,200,000	$6,000,000
Improvement Projects	**$709,000**	$710,000	$710,000	$710,000	$710,000	$3,549,000
Metro Parks Funds	**$159,000**	$160,000	$160,000	$160,000	$160,000	$799,000

Capital Improvements Project Detail

Category: **NEIGHBORHOOD STABILIZATION PROJECTS**

Project : CARONDELET PARK

Project Description: Carondelet Park is one of the oldest parks in the City of St. Louis, dating back to 1875. Today, the unusual undulating topography makes Carondelet Park one of the regions most interesting parks. Another interesting curiosity is the park's fascinating collection of sinkholes. Sinkholes are caused by the collapse of dissolving limestone-formed underground chambers. Both lakes in the park were created by enlargements in a series of such sinkholes.

Major capital improvements scheduled for the next five years include total reconstruction of the park roadways, upgrades to comply with the ADA, replacement of concrete sidewalks, and landscaping. The FY14 1/2 Cent Capital funds, Metro Parks funds and the new 3/16 Cent Metro Parks provided funds for ADA Improvements to the Tennis Court Comfort Stations, Re-Roof the #1 Pavilion, Repairs to the Boathouse and Repairs to the Multi-Purpose Trail. The new 3/16 Cent Metro Parks Tax, which startedin FY13 , will provide additional revenue. In FY15 the funding from the 1/2 Cent Capital Improvement Sales Tax for Major Parks and the Metro Parks Sales Tax for Major Parks has been combined to support the new 2014 Park Improvement Bonds. Details of projects will be provided when finalized. The FY17 Capital funds will provide for renovations of the Boat House and Miscellaneous Park Repairs.

Source Of Funds: Capital Improvement Sales Tax - Major Park Account

Metro Parks Sales Tax - Major Park Accounts

3/16 Cent Metro Parks Sales Tax - Major Park Accounts

Impact on Operating Budget The repairs and renovations to the park, provided by the Capital funds budget, will reduce many of the spot repairs and allow for the stabilization of the park's facilities and increase park usage.

	Capital Budget	Proposed Capital Funding				
Project Costs	**FY2017**	**FY2018**	**FY2019**	**FY2020**	**FY2021**	**Total**
3/16 Cent Metro Parks	**$184,945**	$190,000	$190,000	$190,000	$190,000	$944,945
Improvement Projects	**$124,329**	$130,000	$130,000	$130,000	$130,000	$644,329
Metro Parks Funds	**$34,310**	$35,000	$35,000	$35,000	$35,000	$174,310

Capital Improvements Project Detail

Category: **NEIGHBORHOOD STABILIZATION PROJECTS**

Project : FAIRGROUND PARK

Project Description: Fairground Park is one of the City's premier parks. It was the site of the first zoological gardens and automobile races in St. Louis. The park was host to the first agricultural fair which soon blossomed as a gigantic county fairground. At the corner of Grand and Natural Bridge, the face of the old bear pits still guards the park's main entrance.

Major capital improvements scheduled for the next five years include total reconstruction of the park roadways, playground renovation, rebuild tennis courts, replacement of asphalt sidewalks, pool renovations, ballfield lighting improvements, and electrical system upgrades. The FY14 Metro Parks funds, 1/2 Cent Capital funds and the new 3/16 Cent Metro Parks provided funds for ADA Renovations to the Park Comfort Stations and Other Projects . In FY17 the funding from the 1/2 Cent Capital Improvement Sales Tax for Major Parks and the Metro Parks Sales Tax for Major Parks has been combined to support the new 2014 Park Improvement Bonds.

Source Of Funds: Capital Improvement Sales Tax - Major Park Account

Metro Parks Sales Tax - Major Park Accounts

Beginning Balance

3/16 Cent Metro Parks Sales Tax - Major Park Accounts

Impact on Operating Budget The repairs and renovations to the park, provided by the Capital funds budget, will reduce many of the spot repairs and allow for the stabilization of the park's facilities and increase park usage.

	Capital Budget	Proposed Capital Funding				
Project Costs	**FY2017**	**FY2018**	**FY2019**	**FY2020**	**FY2021**	**Total**
3/16 Cent Metro Parks	**$134,728**	$120,000	$120,000	$120,000	$120,000	$614,728
Improvement Projects	**$90,687**	$100,000	$100,000	$100,000	$100,000	$490,687
Metro Parks Funds	**$25,026**	$30,000	$30,000	$30,000	$30,000	$145,026

Capital Improvements Project Detail

Category: **NEIGHBORHOOD STABILIZATION PROJECTS**

Project : FOREST PARK - Improvements

Project Description: Forest Park is the largest park in the City of St. Louis, encompassing nearly 1,300 acres. Forest Park is a major attraction for both area residents and visitors. Many cultural institutions, including the St. Louis Zoo, St. Louis Art Museum, St. Louis History Museum and St. Louis Science Center, are located in Forest Park. Forest Park is a popular recreation area and includes a golf course, bike path, fishing lakes, and ball fields. In 1995, the Forest Park Master Plan was developed to provide direction for efforts to restore and maintain the park. As a result, St. Louisians will invest an estimated $86 million in public and private funds to return Forest Park to its former glory. In March, 1997, the City issued $19.3 million in lease debt to raise funds for the project. The annual debt service for this 25-year issue totals about $1,370,000. The remaining funds from the allocated 1/2 cent sales tax proceeds and Metro Park funds will be applied to projects not included in the master plan.

Major capital improvements over the next five years in accordance with the Master Plan will include reconstruction of roadways, lake expansion, bridge rehabilitation, playgrounds, parking lots, sewers, and other renovations. In FY15 the Capital Budget will fund the current debt service and the new series of 2013 Bonds. The new 3/16 Cent Metro Parks Tax, which startedin FY13, will provide additional revenue. In FY15 the funding from the 1/2 Cent Capital Improvement Sales Tax for Major Parks and the Metro Parks Sales Tax for Major Parks has been combined to support the new 2014 Park Improvement Bonds. Details of projects will be provided when finalized. In FY17 the 1/2 Cent Sales Tax provides for $1,315,000 the Forest Park Bonds and $619,138 for Roadway Resurfacing.

Source Of Funds: Capital Improvement Sales Tax - Major Park Account

Metro Parks Sales Tax - Major Park Accounts

3/16 Cent Metro Parks Sales Tax - Major Park Accounts

Impact on Operating Budget The repairs and renovations provided by the bond funds and the Capital funds will reduce many of the spot repairs and allow for the stabilization of the park.

	Capital Budget	Proposed Capital Funding				
Project Costs	**FY2017**	**FY2018**	**FY2019**	**FY2020**	**FY2021**	**Total**
Debt Service	**$1,315,000**	$1,370,915	$1,370,915	$1,370,915	$1,370,915	$6,798,660
3/16 Cent Metro Parks	**$335,498**	$330,000	$330,000	$330,000	$330,000	$1,655,498
1/2 Cent Improvement Projects	**$619,138**	$600,000	$600,000	$600,000	$600,000	$3,019,138
Debt Service -2013	**$447,980**	$440,000	$440,000	$440,000	$440,000	$2,207,980

Capital Improvements Project Detail

Category: **NEIGHBORHOOD STABILIZATION PROJECTS**

Project : O'FALLON PARK

Project Description: O'Fallon Park is one of the City's oldest parks, dating back to 1908. The park is well noted for its Boathouse Pavilion and the landscaped island in the center of the park lake. The park contains a 1904 Parkkeeper's cottage, picnic pavilions, tennis courts and athletic fields.

Major capital improvements scheduled for O'Fallon Park over the next five years include total reconstruction of park roadways, construction of a perimeter bicycle path, renovation of the Parkkeeper's cottage, rebuild tennis courts, construction of nature trails and landscaping. In FY14 the 1/2 Cent Capital funds were used for construction of the Football Field and ADA Improvements to the Comfort Stations. The new 3/16 Cent Metro Parks Tax, which started in FY13, will provide additional revenue. In FY15 the funding from the 1/2 Cent Capital Improvement Sales Tax for Major Parks and the Metro Parks Sales Tax for Major Parks has been combined to support the new 2014 Park Improvement Bonds. FY17 Capital Funds will provide for Renovations to the Basketball Courts, Re-Landscape Rec. Complex Parking Lot and Miscellaneous Park Repairs.

Source Of Funds: Capital Improvement Sales Tax - Major Park Account

Metro Parks Sales Tax - Major Park Accounts

3/16 Cent Metro Parks Sales Tax - Major Park Accounts

Impact on Operating Budget The repairs and renovations to the park, provided by the Capital funds budget, will reduce many of the spot repairs and allow for the stabilization of the park's facilities and increase park usage.

	Capital Budget	Proposed Capital Funding				
Project Costs	**FY2017**	**FY2018**	**FY2019**	**FY2020**	**FY2021**	**Total**
3/16 Cent Metro Parks	**$131,054**	$140,000	$140,000	$140,000	$140,000	$691,054
Improvement Projects	**$87,762**	$90,000	$90,000	$90,000	$90,000	$447,762
Metro Parks Funds	**$24,219**	$25,000	$25,000	$25,000	$25,000	$124,219

Capital Improvements Project Detail

Category: **NEIGHBORHOOD STABILIZATION PROJECTS**

Project : TOWER GROVE PARK

Project Description: Tower Grove Park is the second largest park in the City, encompassing 289 acres. Donated to the City in 1868 by Henry Shaw, the park is considered the finest remaining example in the nation of an urban Victorian park landscape. In 1989, the park was designated as a National Historic Landmark, one of only four urban parks in the country to be so recognized. Tower Grove Park is governed by a Board of Commissioners that has approved a Master Plan to guide infrastructure improvements.

Major capital improvements over the next five years will include repair to basic infrastructure, such as roads, bridges, and athletic fields, and repairs to historic structures, including picnic shelters, the Piper Plant House, the Stone Shelter, Pavilions and entrances. Other projects include, resurface roads and trails, turf repairs, lighting improvements, tennis courts renovations, playground renovations, entrance renovations, signage, drinking fountain and other equipment replacement. The FY15 Metro Parks and 1/2 Cent Capital provided funds for repairs to the Historic Structures, Reforestation, Equipment Replacement and Other Projects in the Park. The new 3/16 Cent Metro Parks Tax, which started in FY13, will provide additional revenue. In FY16 part of the funding from the 1/2 Cent Capital Improvement Sales Tax for Major Parks and the Metro Parks Sales Tax for Major Parks has been combined to support the new 2014 Park Improvement Bonds. FY17 Capital Funds will provide for Miscellaneous Park Repairs.

Source Of Funds: Capital Improvement Sales Tax - Major Park Account

Metro Parks Sales Tax - Major Park Accounts

3/16 Cent Metro Parks Sales Tax - Major Park Accounts

Impact on Operating Budget None

	Capital Budget	Proposed Capital Funding				
Project Costs	**FY2017**	**FY2018**	**FY2019**	**FY2020**	**FY2021**	**Total**
3/16 Metro Parks	**$289,054**	$290,000	$290,000	$290,000	$290,000	$1,449,054
Improvement Projects	**$190,150**	$200,000	$200,000	$200,000	$200,000	$990,150
Metro Parks Funds	**$52,474**	$60,000	$60,000	$60,000	$60,000	$292,474

Capital Improvements Project Detail

Category: **NEIGHBORHOOD STABILIZATION PROJECTS**

Project : WILLMORE PARK

Project Description: Willmore Park was one of the last major parks to be developed within the City limits. Unlike other major parks, the roads in Willmore are located on the periphery, thereby providing large areas of open land. Later improvements to the park included a bicycle path and five wooden picnic shelters.

Major capital improvements scheduled for the next five years include total reconstruction of the park roadways, upgrade electric service, rebuilding of the tennis courts, playground renovations, upgrades to comply with ADA, reforestation and permanent trash containers around lakes. The FY14 Capital funds were used for ADA Upgrades to the Maintenance Building Comfort Station and Metro Parks funds will provide for Drainage Repairs on the Bike Path. The new 3/16 Cent Metro Parks Tax, which started in FY13, will provide additional revenue. In FY15 the funding from the 1/2 Cent Capital Improvement Sales Tax for Major Parks and the Metro Parks Sales Tax for Major Parks has been combined to support the new 2014 Park Improvement Bonds. FY17 Capital Funds will provide for Miscellaneous Park Repairs.

Source Of Funds: Capital Improvement Sales Tax - Major Park Account

Metro Parks Sales Tax - Major Park Accounts

3/16 Cent Metro Parks Sales Tax - Major Park Accounts

Impact on Operating Budget The repairs and renovations to the park, provided by the Capital funds budget, will reduce many of the spot repairs and allow for the stabilization of the park's facilities and increase park usage.

	Capital Budget	Proposed Capital Funding				
Project Costs	**FY2017**	**FY2018**	**FY2019**	**FY2020**	**FY2021**	**Total**
3/16 Cent Metro Parks	**$110,232**	$110,000	$110,000	$110,000	$110,000	$550,232
Improvement Projects	**$73,135**	$80,000	$80,000	$80,000	$80,000	$393,135
Metro Parks Funds	**$20,182**	$30,000	$30,000	$30,000	$30,000	$140,182

Capital Improvements Project Detail

Category: **NEIGHBORHOOD STABILIZATION PROJECTS**

Project : Neighborhood Parks - Metro Parks Projects

Project Description: In 2000 voters in the St. Louis metropolitan area approved a 1/10 Cent Sales Tax for the regional Metro Parks Projects. Half of the funds collected remain in the City and have been distributed with 40% going to the 6 Major Parks listed above and 60% going to Neighborhood Parks. Aldermen have provided a minimum match of 25% of the total cost for each neighborhood park projects. A summary of the projects for FY16 will be provided after approval by the Aldermanic Parks Committee.

In FY17 the funding from the 1/2 Cent Capital Improvement Sales Tax for Major Parks and part of the 3/16 Cent Metro Parks Sales Tax for has been combined to provide partial support the new 2014 Park Improvement Bonds. The Balance of the 3/16 Cent Neighborhood Parks funds and all of the 1/2 Cent for Neighborhood Parks will be determined by the Aldermanic Parks Committee. Details of projects will be provided when finalized.

Source Of Funds: Metro Parks Sales Tax - Neighborhood Park Accounts

Metro Parks Sales Tax - Neighborhood Park Accounts

3/16 Cent Metro Parks Sales Tax - Major Park Accounts

Impact on Operating Budget The repairs and renovations to the parks and recreation centers, provided by the Metro Parks funds, will reduce many of the spot repairs and allow for the stabilization of the facilities.

	Capital Budget	Proposed Capital Funding				
Project Costs	**FY2017**	**FY2018**	**FY2019**	**FY2020**	**FY2021**	**Total**
Metro Parks Fund 3/16 Cent	**$637,488**	$650,000	$650,000	$650,000	$650,000	$3,237,488
Metro Parks Funds 1/10 Cent	**$1,221,810**	$1,250,000	$1,250,000	$1,250,000	$1,250,000	$6,221,810

Capital Improvements Project Detail

Category: **NEIGHBORHOOD STABILIZATION PROJECTS**

Project : Recreation Center - Future Projects

Project Description: Amounts shown below are for Projects for Recreation Centers which have not been programmed yet.

The FY17 Recreation funding from the Capital Budget is comprised of $556,800 for the 1/2 Cent Capital Sales Tax and $25,000 for a positive beginning balance. In addition the FY16 Capital Funding Bonds will provide $1.3 million for facility renovations.

Source Of Funds: Capital Improvement Sales Tax - Recreation Center Account

Impact on Operating Budget

	Capital Budget	Proposed Capital Funding				
Project Costs	**FY2017**	**FY2018**	**FY2019**	**FY2020**	**FY2021**	**Total**
Improvement Projects	**$581,800**	$600,000	$600,000	$600,000	$600,000	$2,981,800

Capital Improvements Project Detail

Category: **NEIGHBORHOOD STABILIZATION PROJECTS**

Project : POLICE - Debt Service Police Equipment/Justice Center

Project Description: Ten percent of the capital improvement sales tax is allocated to the Police Department. These funds are being used to pay the debt service on the three area command stations opened in FY90. These command centers replaced eight outmoded district stations and the Fourth District station. The consolidation was designed to improve the deployment of personnel and the overall effectiveness of the Police Department. To the extent the funding is greater than the debt service payment, the excess portion of the Sales Tax funds will be used for debt service on the Justice Center. The Justice Center was redesigned to house the prisoner processing and holdover functions that were housed at the Police Headquarters. This consolidation of the prisoner processing function with the Division of Corrections has increased operating efficiencies of the new facility. The original debt service for the area command stations is completed and Capital funds will provide new debt for Capital Equipment and Improvement Projects.

In FY2017, in addition to funding the debt service, the Capital Budget will provide for lease payments for the Microwave Communications System and their portion of the Debt for the Justice Center. In addition the FY16 Capital Funding Bonds will provide $2.16 million for a Property Custody Facility

Source Of Funds: Capital Improvement Sales Tax - Police Portion

Impact on Operating Budget Consolidation of the prisoner processing function with the Division of Corrections operations has resulted in savings of approximately $800,000 annually.

	Capital Budget	Proposed Capital Funding				
Project Costs	**FY2017**	**FY2018**	**FY2019**	**FY2020**	**FY2021**	**Total**
Debt Service - Police	**$1,310,000**	$1,310,000	$1,310,000	$1,483,000	$1,799,000	$7,212,000
Debt Service - Communications	**$80,000**	$80,000	$0	$0	$0	$160,000
Debt Service - Justice Center	**$548,500**	$409,000	$489,000	$316,000	$0	$1,762,500

FACILITY IMPROVEMENT AND EQUIPMENT REPLACEMENT PROJECTS

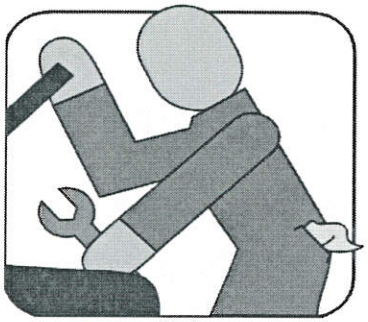

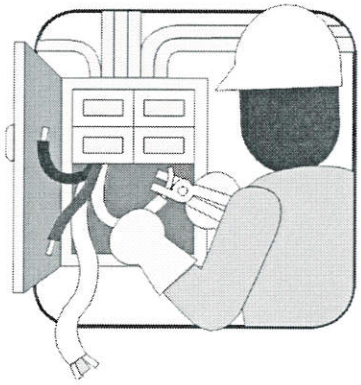

This page intentionally left blank.

Capital Improvements Project Detail

Category: **FACILITY IMPROVEMENTS AND EQUIPMENT REPLACEMENT**

Project : City Buildings Repairs and Renovations

Project Description: Many City buildings have not had their operating systems updated in a long time. For efficient operation and sustainability of the facility environment, upgrades to the Heating, Ventilation & Air Conditioning Systems (HVAC), and in some cases repairs to the Electrical, Plumbing & the Building Envelope for the buildings listed below.

In FY16, $50,000 has been set aside for beginning repairs to the stonework on the Civil Courts Building façade. In FY17 the Capital Budget funds will be provide for various needed repairs.

Source Of Funds: Citywide Capital Improvement Fund

Impact on Operating Budget The repairs and renovations to various City Buildings provided by the Capital funds budget, will reduce many of the spot repairs paid for by the General Fund and allow for the stabilization of the various facilities.

	Capital Budget	Proposed Capital Funding				
Project Costs	**FY2017**	**FY2018**	**FY2019**	**FY2020**	**FY2021**	**Total**
Improvement Projects	**$100,000**	$500,000	$500,000	$500,000	$500,000	$2,100,000

Capital Improvements Project Detail

Category: **FACILITY IMPROVEMENTS AND EQUIPMENT REPLACEMENT**

Project : City Hall Improvements

Project Description: City Hall, constructed in the 1890's, is the core of government operations for the City of St. Louis. Administrative offices are located in City Hall, as well as those offices frequently utilized by City residents. The building is in need of exterior, plumbing, electrical and elevator repairs. Major capital improvements scheduled for the next five years include plumbing repairs, masonry restoration, roof repairs, electrical repairs and enhanced safety. The Five-Year Capital Plan will continue funding for these various projects.

In FY09 the Facility & Infrastructure Debt Service, funded by the Capital Budget, provided $850,000 for exterior repairs to City Hall and renovations of HVAC & electrical systems in the building.

Source Of Funds: Citywide Capital Improvement Fund

Impact on Operating Budget The repairs and renovations to City Hall, provided by the Capital funds budget, will reduce many of the spot repairs paid for by the General Fund and allow for the stabilization of the facility.

	Capital Budget	Proposed Capital Funding				
Project Costs	**FY2017**	**FY2018**	**FY2019**	**FY2020**	**FY2021**	**Total**
Improvement Projects	**$0**	$250,000	$250,000	$250,000	$0	$750,000

Capital Improvements Project Detail

Category: **FACILITY IMPROVEMENTS AND EQUIPMENT REPLACEMENT**

Project : Municipal Garage Repairs

Project Description: The Municipal Garage is a multi-use facility which provides parking and is connected to a Fire Station and equipment repair shop. The current condition of the facility has allowed for water seepage between floors and resulted in damage to vehicles parked there. Due to age, the slabs have sustained cracks which allow water to seep between floors causing spalling of the concrete and the exposure of the reinforcing steel in some areas. This damage is to all areas of the garage with floors, ceilings, and seven columns in need of repair. In many areas the damage ranges from 1" to 3" and some reinforcing steel is corroded and must be repaired. Repairs will help in stabilizing the existing situation and stop the damage to vehicles parked in the garage. Funds provided in FY05, 06, 07 & 08 continued the renovations and will also be used for improvements to the lighting in the facility. The Five-Year Capital Plan will continue funding for this project.

In FY17 the new Debt Service for the Fire & Refuse Garage will also provide funding for major renovations to this facility.

Source Of Funds: Capital Improvement Sales Tax - Citywide Portion

Muni-Garage Revenue

Impact on Operating Budget The Board of Public Service will experience some design & management costs associated with this project. The need for spot repairs will be reduced and the facility will continue to be viable as a parking structure.

	Capital Budget		Proposed Capital Funding			
Project Costs	**FY2017**	**FY2018**	**FY2019**	**FY2020**	**FY2021**	**Total**
Improvement Projects	**$184,000**	$184,000	$184,000	$184,000	$184,000	$920,000

Capital Improvements Project Detail

Category: **FACILITY IMPROVEMENTS AND EQUIPMENT REPLACEMENT**

Project : Soldiers' Memorial - HVAC Systems

Project Description: Soldiers' Memorial Military Museum is dedicated as a memorial for veterans and as a museum for preserving a historical collection of military artifacts and is one of the best examples of "Art Deco" architecture in St. Louis. The memorial building is open to the public and has meeting space available for veterans and other groups. The Memorial was built in the 1930's and has no central air conditioning systems. The improvements to the HVAC, Electric & Plumbing Systems will help maintain the artifacts stored at the facility and improve the comfort of the staff and visitors to the Museum.

Beginning in FY16 the City has partnered with the Missouri History Museum to oversee the operations of the facility, in addition they will be funding a two year project to renovate the facility and bring it up to museum standards. The City will still fund some operational cost for the Memorial.

Source Of Funds: Citywide Capital Improvement Fund

Impact on Operating Budget The addition of an air conditioning system, provided by the Capital funds budget, will increase the cost of utilities. But, it will improve working conditions, visitor comfort and expand the number of days meeting rooms can be comfortably used.

	Capital Budget	Proposed Capital Funding				
Project Costs	**FY2017**	**FY2018**	**FY2019**	**FY2020**	**FY2021**	**Total**
Improvement Projects	**$0**	$0	$0	$0	$0	$0

Capital Improvements Project Detail

Category: **FACILITY IMPROVEMENTS AND EQUIPMENT REPLACEMENT**

Project : Soulard Market

Project Description: Soulard Market is a City-owned farmer's market, where vendors sell produce and other merchandise. The facility is made up of both covered open air stands and enclosed stores which the City rents on a monthly basis. The five year plan for renovations includes repairs to the roof, gutter and downspouts, plumbing and ADA compliance, and electrical repairs to both the inside and outside stands. The Five-Year Capital Plan will continue to fund needed repairs and renovations.

Source Of Funds: Capital Improvement Sales Tax - Citywide Portion

Impact on Operating Budget Improvements to the facility may provide for increased revenues from additional stand rentals. The renovations provided by the Capital funds budget, will reduce many of the spot repairs paid for by the General Fund.

	Capital Budget	Proposed Capital Funding				
Project Costs	**FY2017**	**FY2018**	**FY2019**	**FY2020**	**FY2021**	**Total**
Improvement Projects	**$0**	$200,000	$200,000	$200,000	$200,000	$800,000

Capital Improvements Project Detail

Category: **FACILITY IMPROVEMENTS AND EQUIPMENT REPLACEMENT**

Project : Carnahan Courthouse Renovations

Project Description: In the spring of 2001, the City took ownership of the old Federal Courthouse, (renamed the Carnahan Courthouse) located at Tucker and Market when the Federal government moved to its new federal courthouse facility. City offices previously located in leased office space began moving into the facility in FY02. Courtrooms and offices of the 22nd Judicial Circuit were relocated to the Courthouse in FY03. In FY02, bonds were issued in order to provide approximately $16.0 million in renovations to the courthouse over the next few years. Needed improvements include renovations to the elevators, cooling tower, electrical and HVAC systems, as well as renovations to the courtrooms, restrooms and corridors. Debt service reserve funds provided for the FY13 debt costs, but the Capital Budget will assume the costs this year.

In FY17 in addition to the Debt Service, part of the funds needed to renovate restrooms are provided. Additional funding is provided by the new QECB Energy Efficiently Loan Program.

Source Of Funds: Capital Improvement Sales Tax - Citywide Portion

Impact on Operating Budget In the spring of 2001, the City acquired the Carnahan Courthouse (Old Federal Courthouse) adjacent to the City's new Justice Center. The debt service on the Carnahan Courthouse renovation averages approx. $2.2M annually. The Board of Public Service is experiencing design and management costs associated with repairs and renovations required. The Circuit Courts is incurring operational costs for building maintenance of $900,000 and Facilities Management Division is incurring utility costs of approximately $800,000 for the additional facility.

	Capital Budget	Proposed Capital Funding				
Project Costs	**FY2017**	**FY2018**	**FY2019**	**FY2020**	**FY2021**	**Total**
Debt Service	**$610,000**	$1,508,000	$2,180,000	$2,180,000	$2,180,000	$8,658,000
Improvement Projects	**$150,000**	$0	$0	$0	$0	$150,000

Capital Improvements Project Detail

Category: **FACILITY IMPROVEMENTS AND EQUIPMENT REPLACEMENT**

Project : Federal Mandates - ADA Compliance

Project Description: The Americans with Disabilities Act (ADA) mandates that City facilities be made accessible to persons with disabilities. In order to comply with the ADA, the Capital Budget includes funding for projects such as installing new signage and renovating building entrances and restrooms. A number of ADA improvements are also included in other areas of the Capital Budget, such as renovations in parks and recreation centers and street repairs. The Five-Year Capital Plan will continue funding for various projects.

Source Of Funds: Capital Improvement Sales Tax - Citywide Portion

Impact on Operating Budget The Board of Public Service will experience some design & management costs associated with this project.

	Capital Budget	Proposed Capital Funding				
Project Costs	**FY2017**	**FY2018**	**FY2019**	**FY2020**	**FY2021**	**Total**
Improvement Projects	**$0**	$50,000	$50,000	$50,000	$50,000	$200,000

Capital Improvements Project Detail

Category: **FACILITY IMPROVEMENTS AND EQUIPMENT REPLACEMENT**

Project : Federal Mandates - Asbestos & Lead-Based Paint Abatement

Project Description: Many City buildings contain asbestos and lead-based paint. Federal and State environmental laws mandate the removal of these materials. The Capital Budget contains funding for the removal of these materials. When improvements or repairs are done at a City facility, asbestos and lead-based paint are removed as necessary. The Five-Year Capital Plan will continue funding for various abatement projects.

Source Of Funds: Citywide Capital Improvement Fund

Impact on Operating Budget Removal of asbestos and lead-based paint will reduce the need for possible future contamination remediation costs.

	Capital Budget	Proposed Capital Funding				
Project Costs	**FY2017**	**FY2018**	**FY2019**	**FY2020**	**FY2021**	**Total**
Improvement Projects	**$0**	$50,000	$50,000	$50,000	$50,000	$200,000

Capital Improvements Project Detail

Category: **FACILITY IMPROVEMENTS AND EQUIPMENT REPLACEMENT**

Project : Federal Mandates - Underground Storage Tanks

Project Description: The City is required by the Federal government to test all underground tanks and remove leaking tanks. Contaminated soil must also be cleaned up. Ground water monitoring is required in some areas. Certain tanks must be replaced with tanks that meet federal regulations. All underground storage tank removals were completed by January 1998. However, the City is still responsible for monitoring and additional cleanup and the Capital Budget for FY07 provided funds for abatement and remediation of old sites, as required by the State and Federal governments. The Five-Year Capital Plan will continue funding for this project.

Source Of Funds: Capital Improvement Sales Tax - Citywide Portion

Impact on Operating Budget Removal and replacement of certain tanks will reduce the need for possible future contamination remediation costs.

	Capital Budget	Proposed Capital Funding				
Project Costs	**FY2017**	**FY2018**	**FY2019**	**FY2020**	**FY2021**	**Total**
Improvement Projects	**$0**	$50,000	$50,000	$50,000	$50,000	$200,000

Capital Improvements Project Detail

Category: **FACILITY IMPROVEMENTS AND EQUIPMENT REPLACEMENT**

Project : Consolidated Fire and Refuse Repair Garage Debt Service

Project Description: The City's Fire Department Repair Garage was built around the time of the 1904 Worlds Fair. The facility was to small to support the new style of Fire Trucks and was in need of major HVAC, Plumbing & Electrical repairs. Since the building was so old, in need of major renovations and had a limited capacity it was decided to out-source the Fire Truck repairs. After a few years, the current contractor will no longer be able to provide the needed repairs. Also, the North Refuse Garage property, another very old facility, has been sold to a local manufacture. After due diligence it was determined to combine these two facilities. This will provide the capacity needed for the large vehicles and will consolidate operations in a much new facility that should improve operations.

The FY17 Capital Budget will provide funds for the Debt Service of this program.

Source Of Funds: Citywide Capital Improvement Fund

Impact on Operating Budget The consolidated facility will reduce repair parts and the staffing to distribute those parts. Also the number of mechanics will be reduced. The improved physical plant will provide for better working conditions for employees. Having the Fire Trucks done in-house the contractual repair costs will be reduced.

	Capital Budget	Proposed Capital Funding				
Project Costs	**FY2017**	**FY2018**	**FY2019**	**FY2020**	**FY2021**	**Total**
Debt Service	**$1,216,000**	$1,216,000	$1,216,000	$1,216,000	$1,216,000	$6,080,000

Capital Improvements Project Detail

Category: **FACILITY IMPROVEMENTS AND EQUIPMENT REPLACEMENT**

Project : Gateway Transportation Center (Multimodal Facility)

Project Description: The Gateway Transportation Center (Multimodal Facility), opened in 2008, established a centralized location for the various modes of transportation available in the City. The facility serves as a hub facility and provide connections for bus, passenger rail, Metro-Link, and Airport (via Metro-Link) transportation services. The total cost of the project is estimated at $25.9 million. Funding is to come from a variety of sources including Federal ISTEA program funds, the Missouri Department of Transportation (MoDot), Proposition M funds and a loan from the Missouri Transportation Finance Corporation (MTFG). Once Proposition M funds and other Federal funds have been applied to the repayment of the $10.9 million MTFG loan, it is estimated that the City will owe a balance of approximately $4 million. It is anticipated that revenues from the City owned and operated facility may offset some of the financing cost and the operational costs.

In FY06 & FY07 the debt was assumed by the Capital Appreciation Bonds Issue. In FY09 the Facility & Infrastructure Debt Service provided $550,000 for final build-out of the facility. Starting in FY09 the Debt Service costs are being provided by the Capital Budget.

Source Of Funds: Citywide Capital Improvement Fund

Impact on Operating Budget In 2009, the City opened the Gateway Transportation Center, which will provide a connection point for surface transportation in the area. The debt service totals approx. $0.6 million. It is expected that the operational costs of the facility will be offset by revenues generated. In FY15 the General Fund will not provide a subsidy for operational costs.

	Capital Budget	Proposed Capital Funding				
Project Costs	**FY2017**	**FY2018**	**FY2019**	**FY2020**	**FY2021**	**Total**
Debt Service	**$567,000**	$552,000	$0	$0	$0	$1,119,000

Capital Improvements Project Detail

Category: **FACILITY IMPROVEMENTS AND EQUIPMENT REPLACEMENT**

Project : Justice Center - Debt Service

Project Description: In August 1996, the City issued approximately $110 million in lease debt to refinance the existing Medium Security Institution (MSI) expansion and complete design and construction of a new City Justice Center. In FY99 a redesign of the Justice Center was completed to allow for the consolidation of the prisoner-processing (holding cell) functions from the Police Department. Until the spring of 2000 the City was under court orders to limit the number of prisoners housed in the City Jail and MSI. Due to overcrowding and the deterioration of the old City Jail, in FY00 the City contracted with St. Louis County to provide inmate housing, using City correctional officers. The City's total detention capacity with completion of the Justice Center is now over 1,800 beds, or nearly twice the capacity of ten years ago. The facility was opened during the FY03 fiscal year.

The FY17 to FY20 Capital Budget includes funding for the remaining years of debt service for the facility.

Source Of Funds: Citywide Capital Improvement Fund

Impact on Operating Budget The annual debt service on the Justice Center totals approx. $10.5M. In the past the facility has also benefited from the rental of bed space to the U.S. Federal Marshal Service, the revenue has been reduced and is projected to be $40,000. The City has gained added detention capacity with this facility which has an operating budget of $22.5M. The Facilities Management Division is incurring an increase in operating costs for maintenance and has additional utility costs of approximately $975,000 for this facility.

	Capital Budget	Proposed Capital Funding				
Project Costs	**FY2017**	**FY2018**	**FY2019**	**FY2020**	**FY2021**	**Total**
Debt Service	**$10,182,250**	$10,288,200	$3,438,750	$1,545,600	$0	$25,454,800
Improvement Projects	**$0**	$0	$0	$0	$0	$0

Capital Improvements Project Detail

Category: **FACILITY IMPROVEMENTS AND EQUIPMENT REPLACEMENT**

Project : Facility & Infrastructure Debt Service (Juvenile Detention)

Project Description: The Juvenile Detention Facility, Division 30 Juvenile Division, is part of the 22nd Judicial Circuit Court of the State of Missouri and houses 80 to 120 juveniles for various offences. The building is in need of renovations to the HVAC (chiller, heating, ventilation & air conditioning) systems. The facility also needs an emergency backup power system in the event of a power outage. To address the major needs for repairs and renovations to the Juvenile and other City Facilities, the City has issued debt to cover over $12.48 million in project costs which will be funded by the Capital Budget.

In FY09 the Facility & Infrastructure Debt Service, funded by the Capital Budget, provided $4.5 million for HVAC, Plumbing and Electrical Remediation at the facility. The Capital Budget provides the funding for the Facility & Infrastructure Debt Service, projects are noted throughout this document. The FY17 Capital Budget, in addition to debt service, will fund the renovations to the Lock System at the facility.

Source Of Funds: Citywide Capital Improvement Fund

Impact on Operating Budget In FY09 the Facility & Infrastructure Debt Service, funded by the Capital Budget, provided $4.5 million for HVAC, Plumbing and Electrical Remediation at the facility. The Capital Budget provides the funding for the Facility & Infrastructure Debt Service of $1.5 million annually. This funding has allowed for numerous needed repairs and renovations in many City facilities.The repairs and enovations to various City Buildings provided by the Capital funds budget, will reduce many of the spot repairs paid for by the General Fund and allow for the stabilization of the facility.

	Capital Budget	Proposed Capital Funding				
Project Costs	**FY2017**	**FY2018**	**FY2019**	**FY2020**	**FY2021**	**Total**
Debt Service	**$1,547,900**	$1,548,500	$1,548,100	$1,546,700	$1,544,300	$7,735,500
Improvements	**$1,000,000**	$0	$0	$0	$0	$1,000,000

Capital Improvements Project Detail

Category: **FACILITY IMPROVEMENTS AND EQUIPMENT REPLACEMENT**

Project : 1520 Market (Abram) Building - Debt Service

Project Description: The L. Douglas Abram Federal Building at 1520 Market Street was built in 1961 and is located a few blocks West of City Hall. The building has four stories primarily with an open office space design with basement parking & storage. The facility will provide approximately 337,530 sq. ft. of space to serve as primary & satellite offices for numerous City Departments. The City purchased and is in the first stages of renovation to alleviate the problems faced by the Health Department with moving from their building on North Grand and allow for the City Courts operation to move to a City owned facility. Planning is under way to locate other City departments at the facility to provide a more centralized facility for City government operations. In FY12 the City was in phase #2 of the renovations that allowed for the moving of the St. Louis Development Corporation (SLDC) and its associated agencies into the facility.

The FY09 Capital Budget provided funding for the debt service for the renovations of the new facility. In addition to the debt service, the Facility & Infrastructure Debt Service, funded by the Capital Budget, provided $10,000,000 for roof repairs & renovations and $500,000 for data & communications wiring of the facility in preparation for the Health Departments utilization of the facility. Also, in FY12 new debt was issued to address safety & security improvements. In FY16 The original debt issue was refinanced, reducing the cost of the debt. Also, in FY16, new debt was issued totaling $13.0 million to fund property acquisitions related to the NGA relocation project. The FY17 Capital Budget provides funds for servicing both of the debt agreements.

Source Of Funds: Citywide Capital Improvement Fund

Impact on Operating Budget City Departments began to occupy this facility in Spring 2009. The building allowed Departments which were previously in rental space or in substandard facilities to move to a more modern facility. The debt services totals approx. $0.5M and the improvement debt service will be $0.6M. It is expected that the operational costs of the facility will be approx. $1.6M annually. This facility has allowed the City Courts and Slate to move from rental space, the Health Department to move from an antiquated building. A number of City departments, such as CDA, SLDC, and other agencies have also recently moved into the facility.

	Capital Budget	Proposed Capital Funding				
Project Costs	**FY2017**	**FY2018**	**FY2019**	**FY2020**	**FY2021**	**Total**
Debt Service	**$556,000**	$653,000	$654,000	$656,000	$650,000	$3,169,000
Improvement Debt Service	**$479,000**	$479,000	$479,000	$479,000	$479,000	$2,395,000

Capital Improvements Project Detail

Category: **FACILITY IMPROVEMENTS AND EQUIPMENT REPLACEMENT**

Project : Sidewalks Around Municipal Buildings

Project Description: Many of the sidewalks in the area around City Hall and other public buildings in the downtown municipal complex are in need of replacement. Funding over the next five years will provide for those replacements.

Source Of Funds: Citywide Capital Improvement Fund

Impact on Operating Budget The repairs provided by the Capital funds budget, will reduce many of the spot repairs paid for by the General Fund and improve the safety for the public.

	Capital Budget	Proposed Capital Funding				
Project Costs	**FY2017**	**FY2018**	**FY2019**	**FY2020**	**FY2021**	**Total**
Improvement Projects	**$0**	$30,000	$30,000	$30,000	$30,000	$120,000

Capital Improvements Project Detail

Category: **FACILITY IMPROVEMENTS AND EQUIPMENT REPLACEMENT**

Project : QECB Energy Efficiency Loan Program

Project Description: The Qualified Energy Conservation Bond (QECB) funding will establish a green community program for the purposes of creating a St. Louis Energy Efficiency Loan Program to enable qualified residential and a limited extent, commercial property owners within the City to finance the upfront costs associated with making qualified energy efficiency improvements to their homes and businesses. It will also fund energy efficiency improvements that meet the savings standards by the Federal government to certain publicly-owned buildings within the City; and pay the costs associated with issuing the QECBs.

The FY17 Capital Budget will provide funds for the Debt Service of this program.

Source Of Funds: Citywide Capital Improvement Fund

Impact on Operating Budget

	Capital Budget		Proposed Capital Funding			
Project Costs	**FY2017**	**FY2018**	**FY2019**	**FY2020**	**FY2021**	**Total**
Debt Service	**$428,000**	$374,000	$345,000	$338,000	$352,000	$1,837,000

Capital Improvements Project Detail

Category: **FACILITY IMPROVEMENTS AND EQUIPMENT REPLACEMENT**

Project : Rolling Stock / Facilities Renovations

Project Description: The City owns over 1500 pieces of rolling stock, such as trash trucks, dump trucks, tractors and street sweepers, and 1300 pieces of smaller power equipment. Up to date equipment and rolling stock are essential to the City's operations. The poor condition of the City's rolling stock results in increased maintenance costs and productivity losses. The FY05 Capital Budget provided funding for major equipment for the City's Computer network and mainframe systems. The FY11 the Capital Budget extended the line of credit to allow for the purchase of Fire Trucks and other needed rolling stock. The FY14 Capital Budget provides for a limited amount of Debit Service which will provide approximately $12.5 million. This will be used to purchase $9.0 million in rolling stock, approximately 94 vehicles, including aerial trucks for Traffic, dump trucks for Forestry & Streets, mowing equipment for Parks and other small vehicles & trucks for various City departments. In addition to rolling stock, funds will be used for needed updates and repairs to the Corrections facilities, City Hall and other City buildings.

In FY17 the Capital Budget will continue to provide funding for the 2016 Rolling Stock Lease.

Source Of Funds: Citywide Capital Improvement Fund

Impact on Operating Budget The City's Equipment Services Division maintains a vehicle replacement priority list based on the age and maintenance costs of City vehicles. By replacing older vehicles with new rolling stock, the City seeks to optimize vehicle life cycles and control fleet maintenance costs. It is estimated that with the rolling stock purchased with Capital funds, the City will be avoiding in excess of $100,000 in maintenance costs. However, these savings will be more than offset by the aging fleet and the increased maintenance costs of those vehicles that can not be replaced.

	Capital Budget	Proposed Capital Funding				
Project Costs	**FY2017**	**FY2018**	**FY2019**	**FY2020**	**FY2021**	**Total**
Debt Service	**$2,515,000**	$2,515,000	$2,515,000	$1,257,000	$0	$8,802,000

Capital Improvements Project Detail

Category: **FACILITY IMPROVEMENTS AND EQUIPMENT REPLACEMENT**

Project : Rolling Stock / Computer Replacement

Project Description: The City owns over 1500 pieces of rolling stock, such as trash trucks, dump trucks, tractors and street sweepers, and 1300 pieces of smaller power equipment. Up to date equipment and rolling stock are essential to the City's operations. The poor condition of the City's rolling stock results in increased maintenance costs and productivity losses. In FY03 the Capital Committee authorized additional purchases of rolling stock and computer hardware & software in the amount of $2,000,000 for rolling stock and $2,000,000 for computer hardware & software. The purchases were accomplished by using the existing line of credit and effectively extended the current lease purchase for two additional years. The FY05 Capital Budget provided funding for major equipment for the City's Computer network and mainframe systems. The FY11 the Capital Budget extended the line of credit to allow for the purchase of Fire Trucks and other needed rolling stock.

The FY17 Capital Budget will continue to provide funding for the existing debt for the 2010 Rolling Stock, which has been increased to provide for Rolling Stock replacement vehicles. . In addition to the Rolling Stock the FY17 Capital Budget provides funding for Desk Top Computers.

Source Of Funds: Citywide Capital Improvement Fund

Impact on Operating Budget The City's Equipment Services Division maintains a vehicle replacement priority list based on the age and maintenance costs of City vehicles. By replacing older vehicles with new rolling stock, the City seeks to optimize vehicle life cycles and control fleet maintenance costs. It is estimated that with the rolling stock purchased with Capital funds, the City will be avoiding in excess of $100,000 in maintenance costs. However, these savings will be more than offset by the aging fleet and the increased maintenance costs of those vehicles that can not be replaced.

	Capital Budget	Proposed Capital Funding				
Project Costs	**FY2017**	**FY2018**	**FY2019**	**FY2020**	**FY2021**	**Total**
Debt Service / Rolling Stock	**$1,394,367**	$1,394,367	$1,394,367	$1,394,367	$0	$5,577,468
Rolling Stock Purchase	**$0**	$2,000,000	$2,000,000	$2,000,000	$2,000,000	$8,000,000
Debt Service / Computers	**$150,000**	$250,000	$250,000	$250,000	$250,000	$1,150,000