ADVERTISED BID

CITY OF ST. LOUIS

OFFICE OF THE SUPPLY COMMISSIONER
1200 MARKET ST RM 324
ST LOUIS MO 63103-2842

... We agree to furnish the following articles to the City of St. Louis, free of any extra charges, in the quantity named and at the prices respectively stated:

REQUEST FOR QUOTE	PAGE
5111SQ0075	1

ADDRESS CORRESPONDENCE TO

TO

SHIP TO

TRAFFIC DIVISION
1900 HAMPTON AVE
ST LOUIS MO
63139

SEE TERMS AND CONDITIONS ON THE REVERSE SIDE OF THIS QUOTATION SHEET.

DATE PRINTED	TERMS OF SALE	SHIP VIA	F.O.B.	FREIGHT TERMS
04/29/15				

REPLY DUE BY: 05/20/15 **12:00 O'CLOCK NOON**

NEEDED BY DATE	QUANTITY	UNIT	CAT. NO.	ITEM NUMBER	UNIT PRICE	AMOUNT
	REQ LINE NUMBER : 0001					
	1	EA	STRT	35 FOOT MAST AR		
	35 FOOT ARM LENGTH STEEL TRAFFIC SIGNAL STRUCTURE					
	35 FOOT ARM LENGTH STEEL TRAFFIC SIGNAL STRUCTURE "SWIVEL ARM" VALMONT DRAWING NUMBER M0105532P1 POWDER COATED BLACK					
	SEE ATTACHED DRAWINGS POWDER COATED BLACK					
	BRAND ----------			PRODUCT NO. ----------		
	OR ACCEPTABLE EQUAL; UNLESS NO SUBSTITUTIONS ALLOWED CLEARLY STATE MANUFACTURER, BRAND AND NUMBER FOR ALL ITEMS BID. VENDOR MUST SUBMIT DETAILED INFORMATION ON PRODUCTS OFFERED IF NOT BIDDING AS SPECIFIED.					
	::: BIDS WILL BE AWARDED BASED ON OFFICIAL SPECIFICATIONS PROVIDED BY SUPPLY DIVISION ONLY & ANY RELATED ADDENDA. ALL INQUIRIES RELATED TO THIS BID MUST BE IN WRITING (LETTER/E-MAIL/FAX) TO STEPHEN GREGALI:					
	GREGALIS@STLOUIS-MO.GOV/P:314-622-4250/FX:314-622-4141 :::					
	CHECK HERE IF YOU WANT A BID TABULATION: ALLOW 30 DAYS FOR RESULTS ----------					
					TOTAL →	

NAME OF FIRM	**STATE DELIVERY:**	COMPTROLLER Date
ADDRESS	CALENDAR DAYS	
CITY STATE	SIGNED BY:	SUPPLY COMMISSIONER Date
PHONE Area Code ( )		

ADVERTISED BID

CITY OF ST. LOUIS

OFFICE OF THE SUPPLY COMMISSIONER
1200 MARKET ST RM 324
ST LOUIS MO 63103-2842

... We agree to furnish the following articles to the City of St. Louis, free of any extra charges, in the quantity named and at the prices respectively stated:

REQUEST FOR QUOTE	PAGE
5111Q0075	2

ADDRESS CORRESPONDENCE TO

TO

SHIP TO

TRAFFIC DIVISION
1900 HAMPTON AVE
ST LOUIS MO
63139

SEE TERMS AND CONDITIONS ON THE REVERSE SIDE OF THIS QUOTATION SHEET.

DATE PRINTED	TERMS OF SALE	SHIP VIA	F.O.B.	FREIGHT TERMS
04/29/15				

REPLY DUE BY: 05/20/15 **12:00 O'CLOCK NOON**

NEEDED BY DATE	QUANTITY	UNIT	CAT. NO.	ITEM NUMBER	UNIT PRICE	AMOUNT
	STATE BEST GUARANTEED DELIVERY: _____				A.R.O.	
	ALL ITEMS SHALL BE F.O.B. DESTINATION					
	FREIGHT OR DELIVERY CHARGES MUST BE INCLUDED IN QUOTE OR INDICATED BELOW IN ORDER TO RECEIVE PAYMENT!					
	( ) FREIGHT IS INCLUDED IN THE QUOTE PROVIDED					
	- OR -					
	( ) WE WILL CHARGE $ _____ FREIGHT/DELIVERY					
	THE CITY RESERVES THE RIGHT TO SPLIT AWARDS, VENDOR MUST INDICATE (SPLIT) OR (ALL OR NONE) FOR MULTI LINE BIDS.					
	------ BIDDING "ALL OR NONE"					
	------ SPLIT AWARD ACCEPTABLE					
	PLEASE PROVIDE CONTACT INFORMATION FOR THIS BID:					
	NAME: _____					
	E-MAIL: _____					
	PHONE: _____					
					TOTAL →	

NAME OF FIRM	**STATE DELIVERY:**	COMPTROLLER Date
ADDRESS	CALENDAR DAYS	
CITY STATE	SIGNED BY:	SUPPLY COMMISSIONER Date
PHONE Area Code ( )		

ADVERTISED BID

CITY OF ST. LOUIS

OFFICE OF THE SUPPLY COMMISSIONER
1200 MARKET ST RM 324
ST LOUIS MO 63103-2842

... We agree to furnish the following articles to the City of St. Louis, free of any extra charges, in the quantity named and at the prices respectively stated:

REQUEST FOR QUOTE	PAGE
5111Q0075	3

ADDRESS CORRESPONDENCE TO

TO

SHIP TO

TRAFFIC DIVISION
1900 HAMPTON AVE
ST LOUIS MO
63139

SEE TERMS AND CONDITIONS ON THE REVERSE SIDE OF THIS QUOTATION SHEET.

DATE PRINTED	TERMS OF SALE	SHIP VIA	F.O.B.	FREIGHT TERMS
04/29/15				

REPLY DUE BY: 05/20/15 **12:00 O'CLOCK NOON**

NEEDED BY DATE	QUANTITY	UNIT	CAT. NO.	ITEM NUMBER	UNIT PRICE	AMOUNT
	ORDINANCE #60643 - A CITY OF ST LOUIS BUSINESS LICENSE IS REQUIRED IF YOUR COMPANY MEETS ANY OF THE FOLLOWING: (CHECK AS APPROPRIATE):					
	----- BUSINESS IS LOCATED WITHIN THE CITY LIMITS					
	----- DELIVERY WITHIN CITY LIMITS IS BY COMPANY TRUCK					
	----- SALES CALLS ARE MADE WITHIN THE CITY LIMITS					
	* VENDORS SHOULD NOTE IF THEY ARE MINORITY OR WOMEN OWNED BUSINESS (CHECK) MBE ---------- WBE----------					
	LIST ITEMS MANUFACTURED, ASSEMBLED OR PRODUCED IN A FOREIGN COUNTRY ON THE ENCLOSED (BUY AMERICAN) FORM FOR BIDS TOTALING $1,000 OR HIGHER					
	********** WEBSITE INFORMATION ********** * TO DOWNLOAD SUPPLY BIDS GO TO: * HTTP://STLOUIS-MO.GOV/SUPPLY/BID-NOTICES.CFM * CLICK ON BID NOTICES **********					
					TOTAL →	

NAME OF FIRM	STATE DELIVERY:	COMPTROLLER Date
ADDRESS	CALENDAR DAYS	
CITY STATE	SIGNED BY:	SUPPLY COMMISSIONER Date
PHONE Area Code ( )		

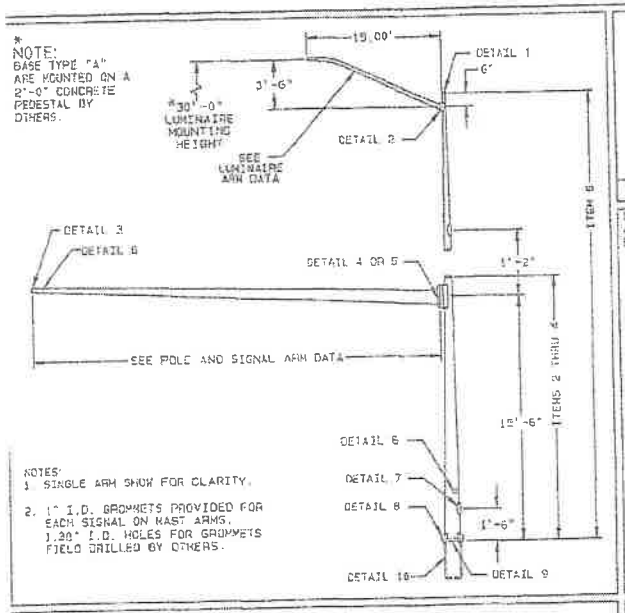

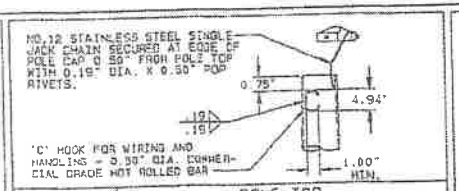

DETAIL 1 POLE TOP

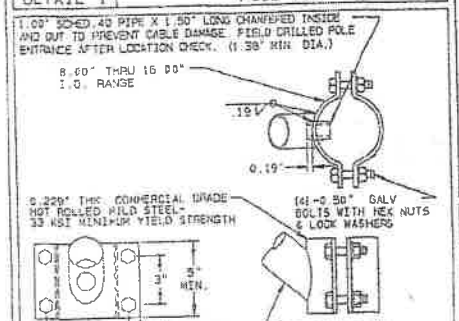

DETAIL 2 LUMINAIRE ARM CLAMP

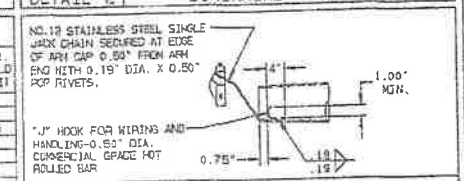

DETAIL 3 ARM CAP

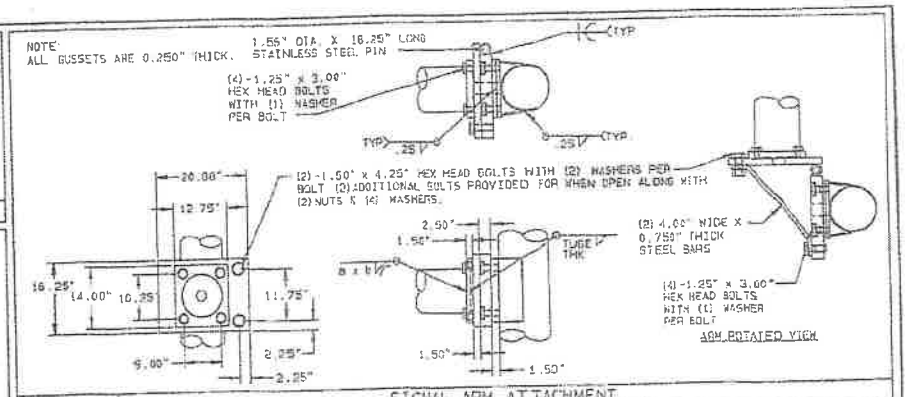

DETAIL 4 SIGNAL ARM ATTACHMENT

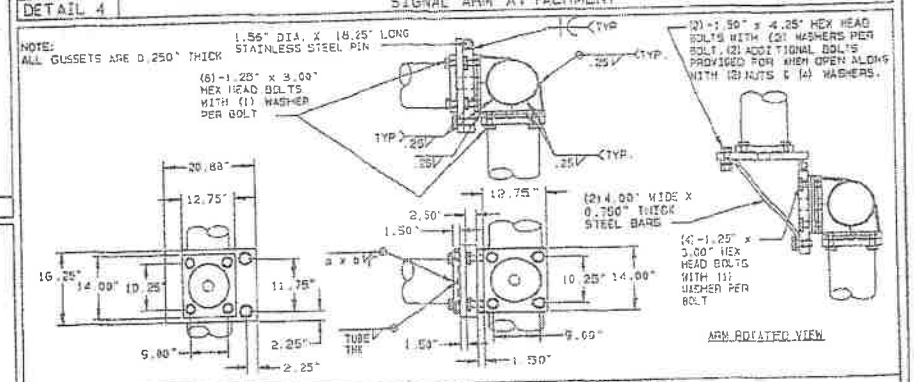

DETAIL 5 DOUBLE SIGNAL ARM ATTACHMENT

MATERIAL DATA

COMPONENT	ASTM DESIGNATION	MIN. YIELD (KSI)	COMPONENT	ASTM DESIGNATION	MIN. YIELD (KSI)
POLE SHAFT	A595 GR.A	55	LUM. CONN. BOLTS	A307	
SIGNAL ARM SHAFT	A595 GR.A	55			
LUM. ARM SHAFT	A595 GR.A	55	ANCHOR BOLTS	F1554 GR.55	55
BASE PLATE	A572 GR.50	50	MAST ARM CONN. BOLTS	A325	
SIMPLEX PLATE - ARM	A572 GR.50	50			
SIMPLEX PLATE - POLE	A572 GR.50	50			
HINGED POLE PLATE	A572 GR.50	50			
HINGED ARM PLATE	A572 GR.50	50			

POLE AND SIGNAL ARM DATA

ITEM	POLE SERIES	POLE TYPE	BASE TYPE	ARM SPAN	QTY.	POLE TUBE: BASE DIA. (IN)	POLE TUBE: TOP DIA. (IN)	POLE TUBE: LENGTH (FT)	POLE TUBE: GAUGE OR THK. (IN)	POLE BASE: SQUARE "S" (IN)	POLE BASE: BOLT CIRCLE "Y" (IN)	POLE BASE: THK. "M" (IN)	POLE BASE: HOLE / SLOT "Z" (IN)	ANCHOR BOLT: DIA. "K" (IN)	ANCHOR BOLT: LENGTH "J" (IN)	ANCHOR BOLT: HOOK "H" (IN)	ANCHOR BOLT: THREAD LENGTH "U" (IN)	SIGNAL ARM TUBE: FIXED END DIA. (IN)	SIGNAL ARM TUBE: FREE END DIA. (IN)	SIGNAL ARM TUBE: GAUGE OR THICK (IN)	SIGNAL ARM TUBE: SPAN (FT)
2	MD	C	A	36	1	12.50	10.19	16.50	3	17.50	16.50	1.75	2.00	1.75	88.00	6.00	8.00	9.00	3.96	7	36.00
3	MD	B	A	45	1	12.50	10.19	16.50	3	17.50	16.50	1.75	2.00	1.75	86.00	6.00	8.00	10.50	4.20	7	45.00
				22														7.00	3.92	7	22.00
4	MD	B	A	36	1	12.50	10.19	16.50	3	17.50	16.50	1.75	2.00	1.75	88.00	6.00	8.00	10.00	4.96	7	36.00
				36														10.00	4.96	7	36.00
5	MD	BL	A	40	1	12.50	9.00	25.00	3	17.50	16.50	1.75	2.00	1.75	88.00	6.00	8.00	10.00	4.40	7	40.00
				40														10.00	4.40	7	40.00

DESIGN CRITERIA:
1994 AASHTO STANDARD SPECIFICATIONS FOR STRUCTURAL SUPPORTS FOR HIGHWAY SIGNS, LUMINAIRES AND TRAFFIC SIGNALS.

DESIGN WIND SPEED:
90 MPH VELOCITY HAVING A 1.30 GUST FACTOR.

REV	DRAWN BY-DATE	CHECK BY-DATE	DESCRIPTION
A	RBC2 04/22/10	RBC2 04/22/10	SS PIN WAS 16.25"LG. REV. #4 BOLT NOTE
	RBC2 03/04/10	JEM 03/05/10	

SOLD TO: TGS, INC.
SHIP TO: TGS, INC.
P.O. #: 139MM0208
AGENT: LIGHTING RESOURCES LLC

JOB: CITY OF ST.LOUIS, MO. MARKET STREET INTERCONNECT
TITLE: TRAFFIC SIGNAL STRUCTURES

VALMONT INDUSTRIES, INC. RESERVES THE RIGHT TO INSTALL VARIOUS, ENGINEER APPROVED, MATERIAL HANDLING ACCOMMODATIONS TO FACILITATE THE MANUFACTURING PROCESS.

valmont
Valley, NE 68064
(402) 359-2201

ORDER NUMBER 105532-P1
PAGE NUMBER 1 OF 2
DRAWING NUMBER M0105532P1
REV A

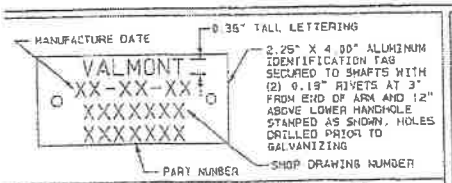

DETAIL 6 | IDENTIFICATION TAG

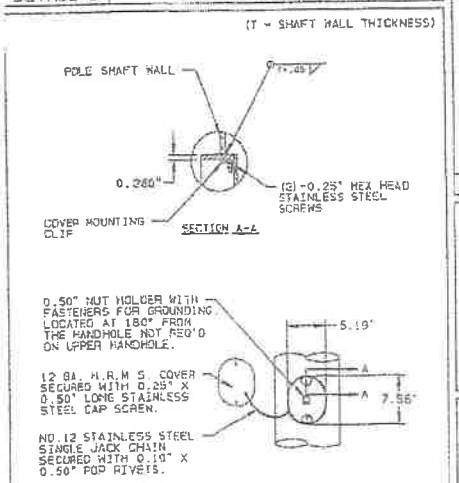

NOMINAL HANDHOLE OPENING IS APPROXIMATELY 4.00" X 6.50". EXTERIOR RIM DIMENSIONS SHOWN.

DETAIL 7 | HANDHOLE

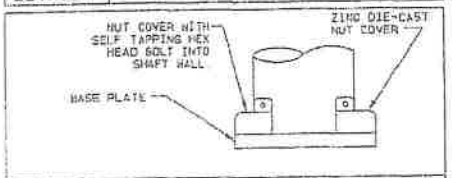

DETAIL 8 | NUT COVER

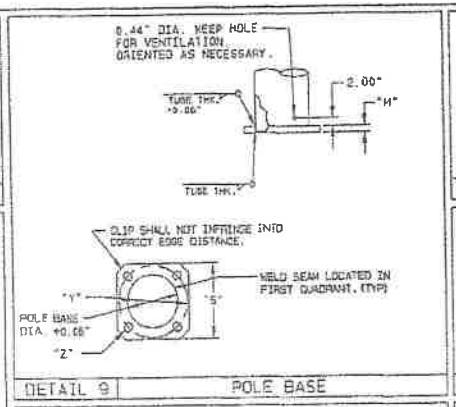

DETAIL 9 | POLE BASE

DETAIL 10 | ANCHOR BOLT

ALTHOUGH RARE, VIBRATIONS SEVERE ENOUGH TO CAUSE DAMAGE CAN OCCASIONALLY OCCUR IN STRUCTURES OF ALL TYPES. BECAUSE THEY ARE INFLUENCED BY MANY INTERACTING VARIABLES, VIBRATIONS ARE GENERALLY UNPREDICTABLE. THE USER'S MAINTENANCE PROGRAM SHOULD INCLUDE OBSERVATION FOR EXCESSIVE VIBRATION AND EXAMINATION FOR ANY STRUCTURAL DAMAGE OR BOLT LOOSENING. THE VALMONT WARRANTY SPECIFICALLY EXCLUDES FATIGUE FAILURE OR SIMILAR PHENOMENA RESULTING FROM INDUCED VIBRATION, HARMONIC OSCILLATION OR RESONANCE ASSOCIATED WITH MOVEMENT OF AIR CURRENTS AROUND THE PRODUCT.

VIBRATION DISCLAIMER

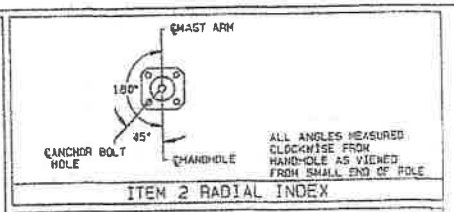

ITEM 2 RADIAL INDEX

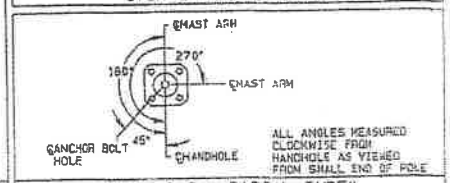

ITEMS 3 & 4 RADIAL INDEX

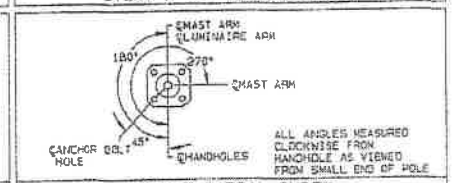

ITEM 5 RADIAL INDEX

JOB CITY OF ST. LOUIS, MO. MARKET STREET INTERCONNECT	VALMONT INDUSTRIES, INC. RESERVES THE RIGHT TO INSTALL VARIOUS, ENGINEER APPROVED, MATERIAL HANDING ACCOMMODATIONS TO FACILITATE THE MANUFACTURING PROCESS.	valmont Valley, NE 68064 (402) 359-2201	ORDER NUMBER 105532-P1
TITLE TRAFFIC SIGNAL STRUCTURES			PAGE NUMBERS 2 OF 2
			DRAWING NUMBER M0105532P1 REV A

CITY OF ST. LOUIS
DEPARTMENT OF FINANCE
OFFICE OF THE SUPPLY COMMISSIONER

CAROL L. SHEPARD, CPA
SUPPLY COMMISSIONER

FRANCIS G. SLAY
MAYOR

1200 MARKET ST RM 324
SAINT LOUIS MO 63103
PHONE 314-622-4580
FAX 314-622-4141

ATTENTION BIDDERS

Please carefully review all information requested in this bid package.

Failure to submit requested samples, literature or any other requested information may result in disqualification of your bid or any portion of your bid.

Also the reasons indicated below may disqualify your bid. If you have any questions, call the buyer indicated in this bid package.

This form must be returned with your bid.

- Two or more bids submitted for one item, unless instructed to do so. (item rejected)
- Signature missing on bid or any required form.
- Buy American Form not completed or returned. (may be rejected)
- M/WBE Form not completed or returned. (may be rejected)
- Altered or erased unit prices must be initialed.
- Faxed bid, unless specifically requested (will be rejected).
- FOR CONTRACTS ONLY: Please provide your DUNS # _____
- FOR CONTRACTS ONLY: Failure to submit required Bond by the date indicated.

I certify that I have read and understand the information above.

_____ Signature

_____ Date

ST. LOUIS DOMESTIC PRODUCTS PROCUREMENT ACT

The City of St. Louis has enacted an ordinance relating to the purchase of domestic products by City government, with penalty provisions. The ordinance amends Section 5.58.010 Revised Code of the City of St. Louis, 1986, as amended by adding thereto new subsections dealing with the requirement that the Supply Commissioner or his designee give preference to goods or commodities manufactured in the United States of America, stating exceptions to said policy. Sections one through six are reprinted below.

Section One. Section 5.58.010 Revised Code of the City of St. Louis is hereby amended by adding the following language: Each solicitation to bid and the method of describing the items to be bid upon of any goods or commodities sought to be purchased by the Office of Supply Commissioner, and any contract entered into by and on behalf of the City of St. Louis and executed by the Mayor and/or the Comptroller of the City of St. Louis wherein the construction, alteration, repair or maintenance of any public works is the subject of the contract so executed, shall contain a provision that the goods or commodities furnished or used in the furtherance of said project by any contractor or subcontractor, manufacturer or supplier as the case may be, shall be manufactured, assembled or produced in the United States, and said requirement as defined above shall be stated in said bid.

Section Two. The provision of Section One of this Ordinance shall not apply in the following instances:

(i) Where the item purchased as the contract entered into for repairs or renovation is less than One Thousand ($1,000.00) Dollars.

(ii) Where no line of a particular good or product is manufactured, assembled or produced in the United States.

(iii) Where the acquisition of United States manufactured or produced goods would increase the cost by more than (10%) percent.

Section Three. The certificate required by this section shall specify the nature of the contract, the product being purchased or leased, the names and addresses of the United States manufacturers and producers contracted by the Commissioner or the project architect or engineer, and an indication that such manufacturers or producers could not supply sufficient quantities or that the price of the products would increase the cost of the contract by more than ten percent.

Section Four. No public agency may authorize, provide for, or make any payment to any vendor or contractor upon any contract in violation of section 2 of this act. Prior to the awarding of the bid and before any public agency authorizes, provides, or makes payment to any vendor or contractor upon any contract to which section 2 or 6 of this act applies, the vendor or contractor shall provide proof of compliance with section 2, and, if applicable, section 6 of this act. Any vendor or contractor who knowingly misrepresents any material fact to the public agency concerning the origin of any manufactured goods or commodities shall be guilty of a Class A misdemeanor.

Section Five. Sections 1 to 6 of this act shall apply only to contracts and subcontracts entered into after the effective date of this act, and shall not limit the use or supply of manufactured goods or commodities purchased or leased prior to the effective date of this act.

Section Six. Nothing in sections 1 or 6 of this act is intended to contravene any existing treaty, law, agreement, or regulation of the United States. All contracts under section 1 or 6 of this act shall be entered into in accordance with existing treaty, law, agreement, or regulation of the United States including all treaties entered into between foreign countries and the United States regarding export-import restrictions and international trade and shall not be in violation of sections 1 to 6 of this act to the extent of such accordance.

Interpretations and Guidelines

Section One: "Shall be manufactured" is interpreted to mean to make or process a raw material into a finished product or to turn-out in a mechanical manner. "Assembled" is interpreted to mean to fit or to join together the parts, gather, or to congregate in a manufacturing environment. "Produced" is interpreted to mean to create by manual or physical effort, to make or yield to customary product or products.

Section Two (I) This is interpreted to mean less than one thousand dollars in aggregate (total purchases).

(III) When applying this subsection, multiply the cost of the foreign product by ten percent and compare the cost to the American product. If the American product cost is less than the sum of the cost of the foreign product plus ten percent, the award will be made to the vendor bidding the American product. The price paid by the City of St. Louis will be the actual price bid by the winning bidder.

Section Three: "Could not supply sufficient quantities" is interpreted to mean in order to meet the using agency's delivery schedule and in quantity specified.

Section Four: The vendor's authorized representative mus complete a self-certification form, as required by the existing procedures previously indicated. These certification forms wil be used to determine whether the manufacturer or producers could, or could not supply sufficient quantities, or the cost o the products would increase the contract by more than ter percent.

Prior to the City awarding the bid, the vendor shall provid certification that the product being bid is manufactured, as sembled or produced in the United States or there is a existing treaty, law or regulation whereby the product bid sha be treated the same as product manufactured, assembled o produced in the United States. The procuring agency sha accept the self certification in order to apply the percentag differential that is applicable under this law. Failure to provid certification shall cause the city to presume that such produc is not American made and preference shall not be considere for that product.

CERTIFICATION FORM
ST. LOUIS DOMESTIC PRODUCTS PROCUREMENT ACT
(BUY AMERICAN)

Bidders are advised of legislation enacted by the City of St. Louis which requires all manufactured goods or commodities used or supplied in the performance of this contract or any subcontract to be manufactured, assembled or produced in the United States, unless obtaining American made products would increase the cost of this contract by more than ten percent.

Section Four requires the vendor or contractor to certify his compliance with this legislation and if applicable, Section Six, if preference is claimed.

This legislation does not apply if the total bid is less than one thousand dollars ($1,000.00).

Bids received will be evaluated on the basis of this legislation. Certificates of compliance must be completed and returned to be considered for preference. Failure to provide certification shall cause the City to presume that such product is not American made.

☐ **CERTIFICATION**
If **all** the specified goods or products are manufactured, assembled or produced in the United States, check box at left and complete certification at the bottom of this form.

☐ **SECTION SIX CERTIFICATION**
If any or all of the specified goods or products are manufactured, assembled or produced in a country other than the "United States", and exemption is requested because such product is Fair Trade Product: (a) list the country, other than the United States, where each good or product you propose to furnish is manufactured, assembled or produced; (b) check box at left of this paragraph and list corresponding commodities and (c) complete Section Six Documentation portion below.

Item Number(s)	Location Where Item Manufactured, Assembled or Produced

☐ **SECTION SIX DOCUMENTATION**
The specified goods or products are treated as manufactured, assembled or produced in the United States under an existing treaty, law, agreement or regulation of the United States regarding export-import restrictions and international trade. List item Number(s) and Treaties covering item below.

_____

_____

_____

DEFINITIONS

MANUFACTURED - to make or process a raw material into a finished product; create, or to produce or to turn-out in a mechanical manner.

ASSEMBLED - to fit or join together the parts in a manufacturing environment.

PRODUCED - create by manual or physical effort, to make or yield the customary product or products.

MUST BE COMPLETED AND SIGNED

I hereby certify that the above information is true and correct and further certify that this statement complies with all provisions of Section 5.58.010 Revised Code of the City of St. Louis, 1985, as amended.

FIRM NAME: _____

ADDRESS: _____

CITY: _____ **STATE:** _____ **ZIP:** _____

BY: _____
(SIGNATURE and TITLE)

CITY OF ST. LOUIS/SUPPLY DIVISION
MINORITY/WOMEN BUSINESS ENTERPRISES FORM
(M/WBE FORM)

A. Mayor's Executive Order #28, Section Six - Supply Contracts

1. The goal of the City of St. Louis is that 25% of the value of all contracts let and purchases made by the Supply Commissioner shall be let or made with Minority Business Enterprises (MBEs) and that 5% of the value of all contracts let and purchases made by the Supply Commissioner shall be let or made with Women's Business Enterprises (WBEs).
2. All contracts let by the Supply Division for the purchase or lease of materials, equipment, supplies, commodities or services, the estimated cost of which exceeds $500, shall be subject to this goal.
3. The methods by which the Supply Commissioner shall pursue this goal shall include but not be limited to the following:
   a. The Supply Commissioner shall solicit bids from minority business enterprises and women's business enterprises certified to supply the required materials, equipment, supplies or services;
   b. St. Louis Airport Authority (SLAA) shall provide the Supply Commissioner with a list of minority business enterprises and women's business enterprises qualified to provide each of those commodities that the Supply Commissioner indicates are required by the City;
   c. The Supply Commissioner shall notify SLAA prior to solicitation of bids whenever no such qualified businesses are available;
   d. SLAA shall attempt to identify such qualified businesses, and if successful, shall notify the Supply Commissioner of their availability; and
   e. The Supply Commissioner shall provide such minority business enterprises and women's business enterprises every practical opportunity to submit bids.
4. Joint ventures or mentor-protégé relationships between prime contractors and subcontractors with local MBE and WBE firms are encouraged.
5. Participation of MBE and WBE firms located outside the St. Louis Metropolitan Statistical Area (SMSA) shall not count toward the goals established in this order.

B. SUPPLY DIVISION POLICY

It is the policy of the Supply Division that all bids/contracts awarded adhere to the Mayor's Executive Order #28. All vendors are encouraged to comply with this policy and all other provisions of Executive Order #28. A copy of Executive Order #28 is available upon request. Each Vendor/ Contractor (bidder) must complete, sign and return this M/WBE Form. Failure to complete, sign and return the M/WBE Form will result in the bid being declared non responsive and your bid may be eliminated.

C. OBLIGATION

The bidder agrees to make a good faith effort to ensure that M/WBE businesses have an opportunity to participate in the performance of contracts or subcontracts financed in whole or in part with City funds. The bidder will take all necessary and reasonable steps to ensure that said businesses have an opportunity to compete for and perform under this bid/contract. The bidder shall not discriminate on the basis of race, color, national origin or sex in the award and performance of bids/contracts. The Directory of Disadvantaged, Minority and Women Owned Business Enterprises certified by the City of St. Louis, can be viewed at www.mwdbe.org.

CITY OF ST. LOUIS/SUPPLY DIVISION
MINORITY/WOMEN BUSINESS ENTERPRISES FORM
(M/WBE FORM)

D. BID/CONTRACT IDENTIFICATION

Bid #: _____ or Contract Name: _____

Opening Date: _____ Your Bid Total: $ _____

If your bid is $500 or higher, please complete Section 'E". We are NOT requesting information on how your company currently supports M/WBE suppliers. We want to know if there are opportunities you might consider to work with M/WBE suppliers for THIS SPECIFIC bid/contract.

E. ASSURANCE

MBE/WBE Goal: 25% MBE and 5% WBE (Minimum Participation)

I, acting in my capacity as an officer of the undersigned bidder(s) if a joint venture, hereby assure the City of St. Louis that on this bid/contract my company **will**: **(CHECK ONLY ONE)**

☐ **Meet or exceed the M/WBE goal with: _____% MBE and _____% WBE Participation**

Proposed MBE Vendor Name: _____ Amount $_____

Item or materials to be supplied by MBE Vendor: _____

Proposed WBE Vendor Name: _____ Amount$ _____

Item or materials to be supplied by WBE Vendor: _____

☐ **Fail to meet the M/WBE goal, but made a good faith effort to meet the goals as follows:**

_____%MBE and _____% WBE Participation (Enter Proposed Vendor information above.)

☐ **Not meet the M/WBE goal for the following reasons(s):(Check All That Apply)**

	Our Company is an MBE certified by the State of:
	Our Company is a WBE certified by the State of:
	We have contacted suppliers listed in the SLAA Directory but have received no reply
	There are no subcontracting opportunities for this bid/contract
	We are a Dealer and the order will be drop-shipped from the manufacturer to the user
	We are the manufacturer and the order will be drop-shipped from the factory to the user
	A letter of explanation is attached
	Other reason: _____

FIRM NAME: _____ FEDERAL ID NUMBER: _____

SIGNATURE: _____ FAX NUMBER: _____

PRINTED NAME: _____ DATE: _____

TITLE: _____ E-MAIL: _____

ORDINANCE #69431
Board Bill No. 295
Committee Substitute
As Amended

An Ordinance repealing Section One, part 86.040 of Ordinance 56716, pertaining to the opening of bids, codified as Section 5.58.040 of the Revised Code of the City of St. Louis, and enacting a new provision on the same subject matter which allows a local bidder to match the lowest bid when the lowest bid is from a non-local bidder; enacting a new provision on the same subject matter; containing severability clause.

WHEREAS, local businesses which seek to enter into contracts with the City of St. Louis are at a competitive disadvantage with businesses from other areas because of the higher administrative costs of doing business in the City;

WHEREAS, the City of St. Louis desires to encourage businesses to remain in the City and to relocate to the City;

WHEREAS, by enacting a local preference law that allows a local firm to match the lowest bid when its bid is within 2% percent of the lowest bid, the City hopes to encourage and stimulate local business.

BE IT ORDAINED BY THE CITY OF ST. LOUIS AS FOLLOWS:

SECTION ONE. Section One, part 86.040, Ordinance 56716 is hereby repealed.

SECTION TWO. Enacted in lieu thereof is the following new section.

5.58.040 - Opening of bids.

A. Proposals shall be opened at the time and place fixed by the advertisement, in the presence of such bidders as desire to be present, and shall be open to the inspection of bidders.

B. The bids shall not be materially modified or amended as to price, specification or otherwise, nor substitutions placed thereon, after opening except when the lowest bid is from a non-local bidder. When the lowest bid is from a non-local bidder, any local bidder within two percent of the lowest bid may match the lowest bid. If a local bidder matches the lowest bid, then the Supply Commissioner may select the bid from the local bidder. If more than one local bidder is within two percent of the lowest bid, then only the lowest local bidder may match the bid. In all other circumstances, modification, supplementation or amendment shall cause rejection of the bid. For purposes of this chapter, local bidder means a bidder whose principal place of business is within the City of St. Louis, has had a valid business license for at least one year, and is current in payment of local taxes. Principal place of business shall be defined as the business's physical office, plant, or site where a majority (51%) of the full-time employees, chief officer, and managers of the business regularly work and conduct business, or where the plant or office and equipment required for the furnishing of the goods or performance of the services provided to the City, as required by the contract, are physically located in the City of St. Louis for at least one taxable year immediately prior to the date of the bid.

C. Bids may be for one or more or all the articles advertised for, but there shall be a specific bid on each article. The award may be made to the lowest bidder for any article, or to the lowest bidder for the entire requisition or any part thereof, but the Board of Standardization may reject any or all bids or any part of any bid.

SECTION THREE. Severability.

The provisions of this section are severable. If any provision of this ordinance is declared invalid, that invalidity shall not affect other provisions of the ordinance which can be given effect without the invalid provision.

Approved: April 29, 2013

CITY OF ST LOUIS, MISSOURI
INSTRUCTION TO BIDDERS (for request for quotations - RFQs)

VENDORS SHOULD CAREFULLY READ THE FOLLOWING INSTRUCTIONS AND TERMS AND CONDITIONS, BEFORE SUBMITTING QUOTATION. **CAUTION: THIS IS NOT AN ORDER**

- Quotations will only be accepted on this form which must be returned in a **sealed envelope**. *The upper left corner of the envelope must include the following information: Vendor Name, Quotation Number and the Due By Date.* This information is also required on any mail delivered next day or overnight.
- Quotations should be typewritten or in ink. Altered or erased unit price(s) must be initialed. One copy of Quotation Sheet must be submitted, please retain a copy for your files.
- The Supply Commissioner reserves the right to reject any or all bids.
- The Supply Commissioner reserves the right to make awards on an item basis or on a total basis.
- Bidders must quote Unit Price(s) and Extension on each item. When an error appears on an extension, the Unit Price(s) will govern.
- When Quotation Sheet requests item(s) by brand name and your quote is for an alternate brand – show brand name(s) with model number(s) and attach full specifications.
- When Quotation Sheet has only a general description(s) of item(s) required – show brand name with model number(s) and attach full specifications.
- Suppliers shall not offer more than one bid on each item. Two or more quotations on the same item may cause a rejection of the bid. Suppliers must determine which one of their many styles or types fully meet the specification.
- Freight or delivery charges must be included in quote, or shown separately on quote, so bid can be evaluated.
- **Bids must arrive no later than NOON** on the date stated or will be rejected. Faxed or E-mailed bids are not accepted unless specifically requested.
- Bids will be publicly opened on the date specified beginning at NOON.
- Prices quoted will be considered firm.
- Bids having an acceptance limit of less than 30 days after opening date may be rejected.
- Time of proposed delivery must be stated in definite terms.
- Failure of Bidder to understand the item(s) requested or any part of the specifications will not be a valid reason for bidding on the wrong item(s). Any questions regarding description of item(s) requested should be cleared with the Buyer listed in the bid document.
- **Samples** when requested must be delivered before actual time of bid opening with each sample plainly tagged showing the name of Bidder, Quotation Number, Brand Name and lot number or quality. Submission of samples does not relieve bidder from meeting the specifications as outlined in the Bid Documents unless the bidder specifically states they are bidding on an alternate.
- All samples are to be submitted to the address listed below unless otherwise stated in Bid Documents.
- Deliveries must be accompanied by a packing slip or invoice, listing the Department, Quotation Number, and the exact quantities of each item included in the shipment.
- ONLY U.S.P., N.F., OR N.N.D. DRUGS ARE ACCEPTABLE. ALL DRUGS MUST COME IN MANUFACTURER'S ORIGINAL PACKAGES, PROPERLY SEALED.
- In the event the successful bidder fails to make delivery of any item or items that meet the conditions and requirements as outlined in this proposal within 7 days of time stated by bidder on face of this quotation sheet, the City reserves the right to purchase said item or items on the "OPEN MARKET" and charge any costs above the BID PRICE to the bidder.
- The laws of the State of Missouri provide that the City of St. Louis pay no State Sales or Use Tax or Federal Excise Taxes and these taxes should be excluded from your bid price. Federal Excise Tax Exemption Certificates will be furnished to successful bidder.
- Suppliers shall save harmless the City of St. Louis from the payment of any and all claims or demands arising out of any infringement, alleged infringement, or use of any patent or patented device, article, system, arrangement, material or process used by him in the execution of this contract.

- Supply Division hours are Monday through Friday – 8:00 A.M. to 5:00 P.M. Main Number: 314-622-4580.

All bids must be submitted in a SEALED ENVELOPE and mailed to:

SUPPLY COMMISSIONER
1200 MARKET ST RM 324
ST LOUIS MO 63103-2842